9. Inspection and Gaging Tools

Nageswara Rao Posinasetti

Inspection

- Nominal dimension
- Tolerance
  - Use
  - Appearance
  - Cost
- Datum or Reference

Basic principles of gaging

- Measurement
  - Measuring can be defined as the determination of a dimension.
- Gaging
  - Gauging is defined as the acceptability of a given dimension whether it lies in its specified or allowable limits or not.
- Gage tolerance
  - 10% work tolerance

Gage maker tolerances

- Class XX – closest tolerances – master gages
- Class X – next best – master and inspection gages
- Class Y – next best – inspection and working gages
- Class Z - lowest – working gages with coarse tolerances

Table 9-1 Standard Gage Maker's Tolerances

Above (in)	To and including (in)	Class (in)			
		XX	X	Y	Z
0.010	0.825	0.00002	0.00004	0.00007	0.00010
0.825	1.510	0.00003	0.00006	0.00009	0.00012
1.510	2.510	0.00004	0.00008	0.00012	0.00016
2.510	4.510	0.00005	0.00010	0.00015	0.00020
4.510	6.510	0.000065	0.00013	0.00019	0.00025

Gage tolerances

- Plug gage for 1 $\pm$ 0.0006 inches
- Gage tolerance = 0.00012 inch
- From table Z class
- If Plug gage for 1 $\pm$ 0.0006 inches
- Gage tolerance = 0.00006 inch
- From table X class

Gage tolerances

- Plug gage for 1 ± 0.0075 inches
- Gage tolerance = 0.0015 inch
- From table Z class
- Smaller degree of gage tolerance means more expensive
- Gage tolerances should be realistically applied.

Allocation of gage tolerances

- Bilateral system
  - The GO and NOGO gage tolerance zones are divided into two parts by the high and low limits of the workpiece tolerance zone

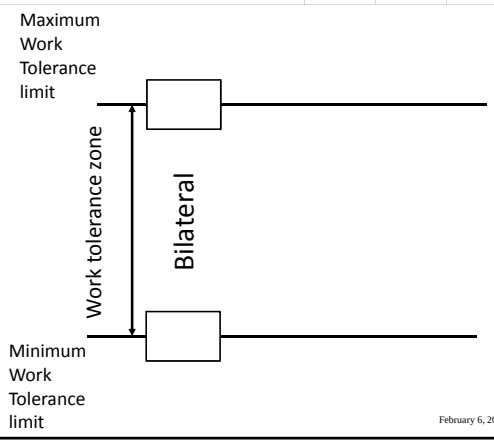

Allocation of gage tolerances

- Hole to be gaged 1.2500 ± 0.0006 inch
- Work tolerance = 0.0012 inch
- Hole size from 1.2506 to 1.2494 inch
- Gage tolerance (10%) = 0.00012 inch
- Z-class tolerance zone
- GO gage size 1.2494 ± 0.00006 inch
- NOGO gage size 1.2506 ± 0.00006 inch

Table 9-1 Standard Gage Maker's Tolerances

Above (in)	To and including (in)	Class (in)			
		XX	X	Y	Z
0.010	0.825	0.00002	0.00004	0.00007	0.00010
0.825	1.510	0.00003	0.00006	0.00009	0.00012
1.510	2.510	0.00004	0.00008	0.00012	0.00016
2.510	4.510	0.00005	0.00010	0.00015	0.00020
4.510	6.510	0.000065	0.00013	0.00019	0.00025

Allocation of Gage Tolerances

- Unilateral system
  - The work tolerance zone entirely includes the gage tolerance zone
  - Work tolerance smaller by the sum of the gage tolerance

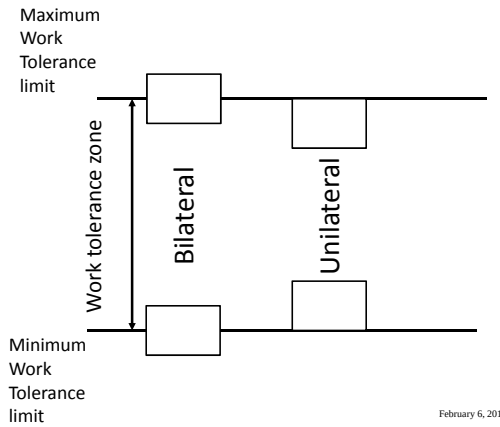

Allocation of gage tolerances

- Hole to be gaged 1.2500 ± 0.0006 inch
- Work tolerance = 0.0012 inch
- Hole size from 1.2506 to 1.2494 inch
- Gage tolerance (10%) = 0.00012 inch
- Z-class tolerance zone
- GO gage size 1.24940 + 0.00012 inch
- NOGO gage size 1.25060 - 0.00012 inch

Allocation of gage tolerances

- Commercial gages
  - Allocate gage tolerance negatively with reference to both the maximum and minimum limits of the workpiece tolerance (C)
  - NOGO gage tolerance is divided by the maximum limit of the workpiece tolerance and the GO gage tolerance is held within the minimum limit of the workpiece tolerance.

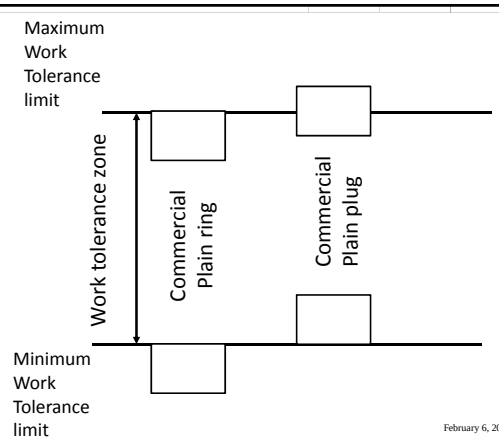

Allocation of gage tolerances

- The objectives in choosing an allowance system should be the economic production of as near 100% usable parts as possible, and the acceptance of the good pieces and rejection of the bad.

Gage Wear Allowance

- Wear allowance is an amount added to the nominal diameter of a GO-plug and subtracted from that of a GO-ring gage.
- It is used up during the gage life by wearing away of the gage metal.

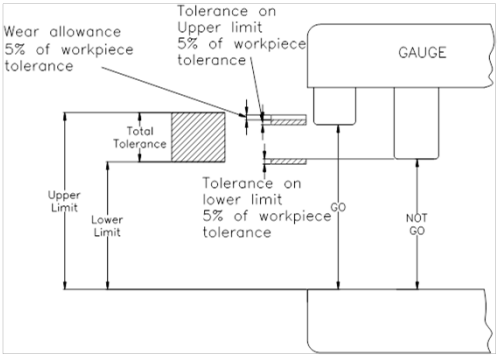

Gage Wear Allowance (5%)

- Hole diameter 1.5000 ± 0.0006 inch
- Work tolerance = 0.0012 inch
- Gage tolerance (10%) = 0.00012 inch
- GO gage size 1.49940 + 0.00006 = 1.49946 inch
- Add gage maker tolerance as shown previously, 1.49946 +0.00012 and –0.00000 as limits

Gage Materials

- Chrome plated
- Tungsten carbide tipped

Surface Plate

- Main horizontal reference plane
- Rigid block of granite or cast iron
- Generally have three-point suspension to prevent rocking when mounted on uneven surface
- Two types
  - Cast-iron plates
  - Granite surface plates

Surface Plate

- Cast-iron plates
  - Well ribbed and high strength
  - Good wear-resistance qualities
  - After machined, surface scraped by hand to flat
    - Operation long and cost high
- Granite surface plates
  - Manufactured from gray, pink, or black granite
  - Several degrees of accuracy
  - Extremely flat finishes produced by lapping

Advantages of Granite Plates

- Not appreciably affected by temperature change
- Will not burr, therefore, accuracy not impaired
- Nonmagnetic
- Rustproof
- Abrasives will not embed themselves as easily in the surface

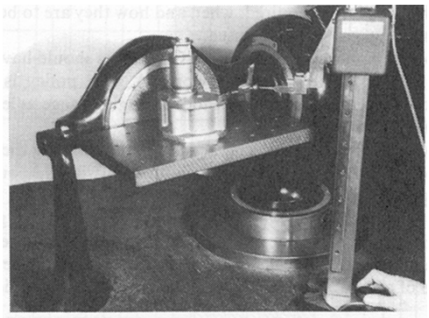

Figure 9-7. Typical surface plate setup.

Template

- Specified profile
- Guide to the location of workpiece features with reference to a single plane.
  - A straight edge is a template for checking straightness.
  - Radius gages
  - Screw pitch gages

Fig 9-6 Gaging the profile of a workpiece with a template

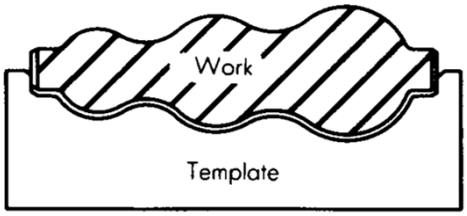

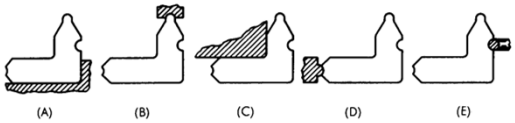

Figure 9-9. Commercial radius gage and applications: (*A*) inspection of an inside radius tangent to two perpendicular planes; (*B*) inspection of a groove; (*C*) inspection of an outside radius tangent to two perpendicular planes; (*D*) inspection of a ridge segment; (*E*) inspection of roundness and diameter of a shaft.

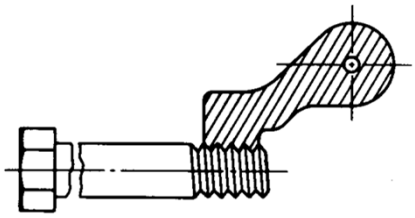

***Figure 9-10*. Screw pitch gage and method of application.**

Plug Gages

- A plug gage is a fixed gage usually made up of two members
- One member is called the GO end and the other the NO-GO or NOT-GO end
- AGD – American Gage Design standards

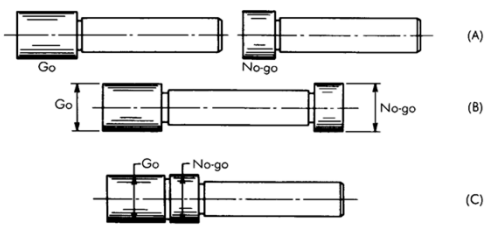

Figure 9-11. AGD cylindrical plug gages used to inspect the diameter of holes.

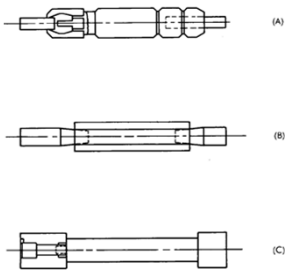

Figure 9-12. AGD cylindrical plug gages (*A*) reversible wire type, (*B*) taper lock design (*C*) trilock design.

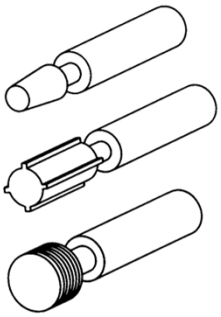

Figure 9-13. Special plug gages used to inspect the profile or taper of holes. They check the individual feature elements but they do not check the boundary of perfect form.

Ring gages

- Ring gages are usually used in pairs, consisting of go member and no-go member.

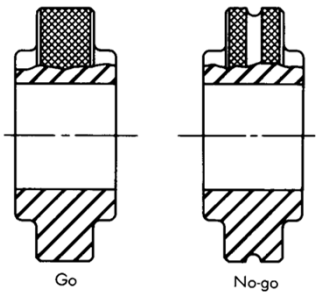

Figure 9-14. Ring gage set used to inspect the diameter of shafts.

Figure 9-15. Special ring gages to check profile or taper on parts. (*Courtesy, Hemco*)

Snap Gages

- For measuring length, diameter, thickness or width

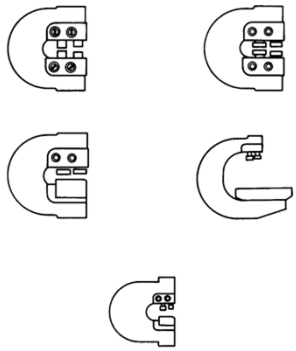

Figure 9-16. **AGD adjustable snap gages.**

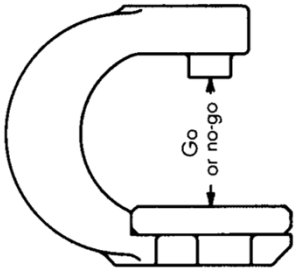

Figure 9-17. **Plain snap gage.**

Figure 9-18. Thread snap gages. (*Courtesy, Johnson Gage Co.*)

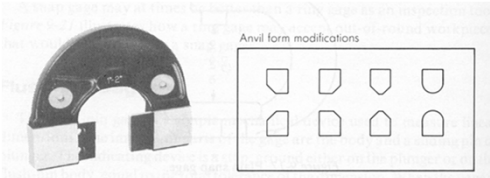

Figure 9-19. Adjustable form and groove snap gage shown with typical anvil form modifications. (*Courtesy, Standard Gage Co.*)

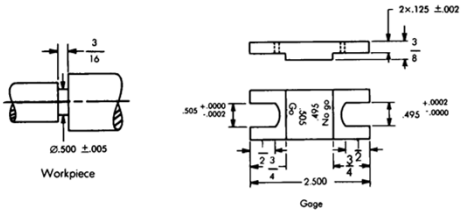

Figure 9-20. **Special snap gage.**

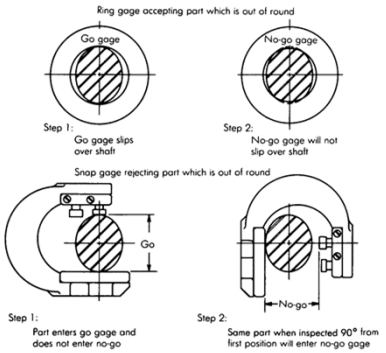

Figure 9-21. Gage comparison.

Amplification and Magnification of Error

- As the measurable error becomes small, it is difficult for direct reading and hence some means of magnification is required.
- Dial indicators
- Optical
- Pneumatic gauging

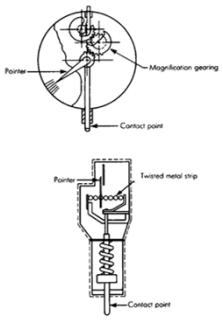

Figure 9-24. (Above) Basic operating principles of dial indicator. (Below) This Comparator employs 100% mechanical amplification without gears or pivots.

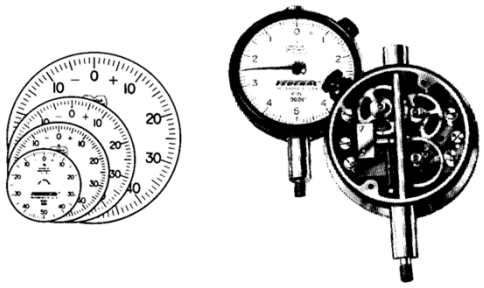

Figure 9-25. Dial indicators. (*Courtesy, Federal Products Corp.*)

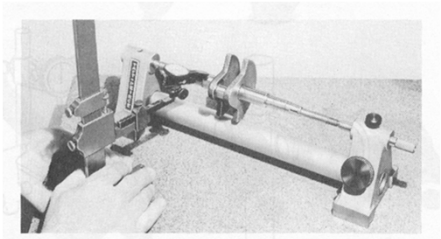

Figure 9-26. Checking runout with standard inspection tools. (*Courtesy, Taft-Peirce*)

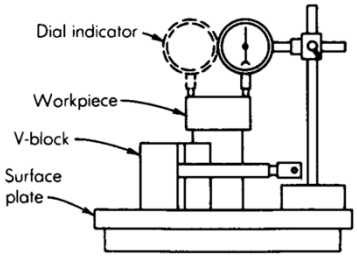

Figure 9-27. Squareness gaging fixture composed of standard inspection tools.

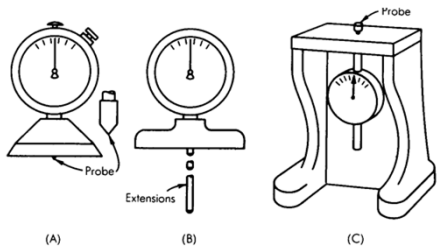

Figure 9-31. Indicator-type depth gages: (*A*) special indicator for checking shallow recesses; (*B*) depth gage with probe extensions; (*C*) bench mounted depth gage.

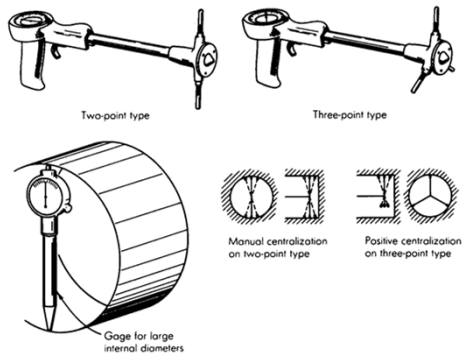

Figure 9-32. Indicator-type bore gages.

Geometric Dimensioning and Tolerancing

- ASME Y14.5-1994 (Rev. 2009)
- ISO 1101, 129, 3040

Symbol for:	ASME Y14.5M	ISO
Straightness	—	—
Flatness	▱	▱
Circularity	○	○
Cylindricity	⌭	⌭
Profile of a line	⌒	⌒
Profile of a surface	⌓	⌓
All around	↗⊖	↗⊖ (proposed)
Angularity	∠	∠
Perpendicularity	⊥	⊥
Parallelism	//	//
Position	⌖	⌖
Concentricity (concentricity and coaxiality in ISO)	◎	◎
Symmetry	⌯	⌯

Modifiers

- Maximum Material Condition (MMC) -
  - Minimum diameter of a hole and maximum diameter of a shaft
- Least Material Condition (LMC)
  - Maximum diameter of a hole and minimum diameter of a shaft

Circular runout	*↗	↗
Total runout	*⌰	⌰
At maximum material condition	Ⓜ	Ⓜ
At least material condition	Ⓛ	Ⓛ
Regardless of feature size	None	None
Projected tolerance zone	Ⓟ	Ⓟ
Tangent plane	Ⓣ	Ⓣ (proposed)
Free state	Ⓕ	Ⓕ
Diameter	Ø	Ø
Basic dimension (theoretically exact dimension in ISO)	50	50
Reference dimension (auxiliary dimension in ISO)	(50)	(50)
Datum feature	*⊢A	*⊢ or *⊢A

*May be filled or not filled

Figure 9-55. Geometric characteristic symbols. (Source ASME Y14.5M-1994 standard)

Symbol for:	ASME Y14.5M	ISO
Dimension origin		
Feature control frame	⌖ Ø0.5Ⓜ A B C	⌖ Ø0.5Ⓜ A B C
Conical taper		
Slope		
Counterbore/spotface	⌴	⌴ (proposed)
Countersink	∨	∨ (proposed)
Depth/deep	↧	↧ (proposed)
Square	□	□
Dimension not to scale	15	15
Number of places	8X	8X
Arc length	100	100
Radius	R	R
Spherical radius	SR	SR
Spherical diameter	SØ	SØ
Controlled radius	CR	None
Between	* ←→	None
Statistical tolerance	ST	None
Datum target	20 or 20 Ø8	20 or 20 Ø8
Target point	×	×

*May be filled or not filled

Flatness checking

- Checking process depends upon the accuracy required
- Using a dial indicator
- After the surface is leveled, the indicator explores the entire area and the full indicator movement is a measure of flatness.

Checking a Profile

- Follow a master part as shown in Fig 9-42.
- Number of dial indicators set in a plane confirming the contour as shown in Fig 9-43.

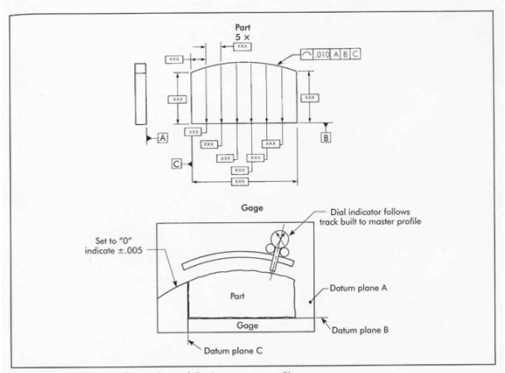

Figure 9-42. Checking profile—indicator following a master profile.

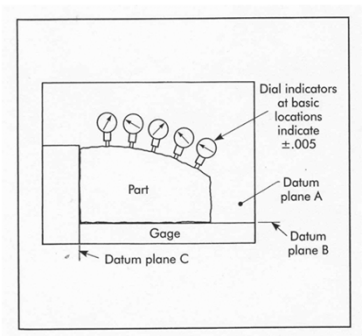

Figure 9-43. Checking profile—fixed indicators set to master part.

Checking for Parallelism/Perpendicularity

- Parallelism can be checked by placing a part on a surface plate and searching for out of parallel condition with an indicator.
- Some times a special fixture may be required as shown in Fig 9-49.
- Perpendicularity of a cylindrical feature and it MMC can be checked with a functional gage as shown in Fig 9-51.

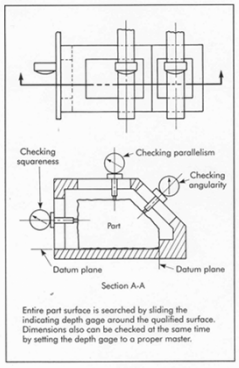

Figure 9-49. Checking squareness, parallelism, and angularity with indicating depth gages.

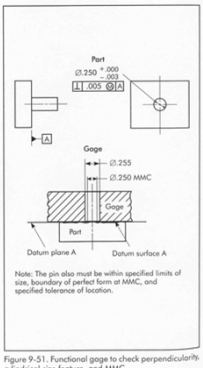

Figure 9-51. Functional gage to check perpendicularity, cylindrical size feature, and MMC.

Fig 9-52 Gage for checking parallelism – cylindrical size feature

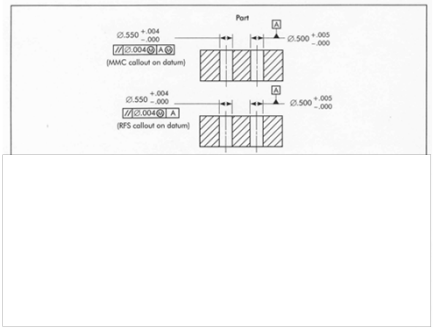

Fig 9-52 Gage for checking parallelism – cylindrical size feature

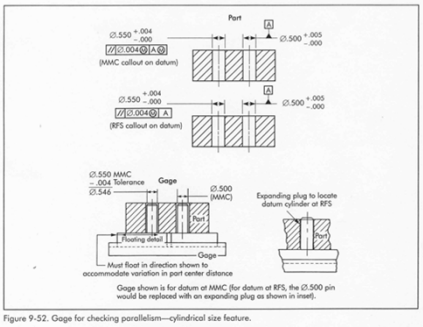

Figure 9-52. Gage for checking parallelism—cylindrical size feature.

Checking a Runout

- Total runout consists, by definition, of two concentric cylinders that encompass a feature about a defined axis.
- Generally, total runout is measured by taking single runout at intervals along an entire cylinder.
- The extremes of needle deflection for the entire set of intervals yields total runout.

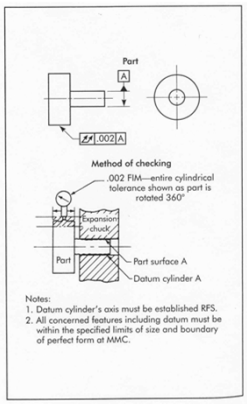

Figure 9-54. Checking runout from an OD datum.

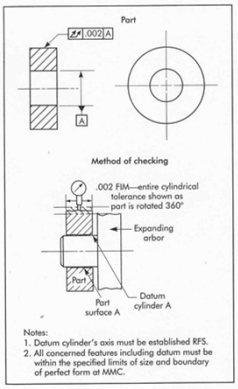

Figure 9-55. Checking runout from an ID datum.

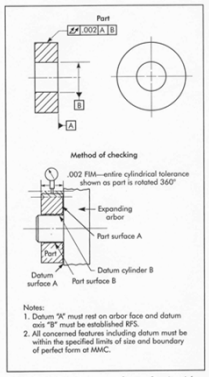

Figure 9-56. Checking runout from a functional face and ID datums.

Checking a Position

- Two holes that need to be gaged.
- Shown is a hole relation gage to check hole-to-hole relationship.
- If RFS (Regardless of Feature Size) is used in place of MMC, gaging will become difficult.
- To maintain the positional tolerance of 0.10 in eleven gage pins will be required for all sizes between MMC and LMC.

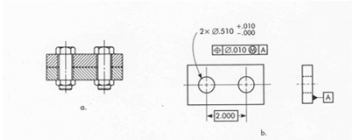

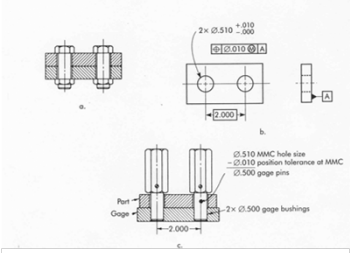

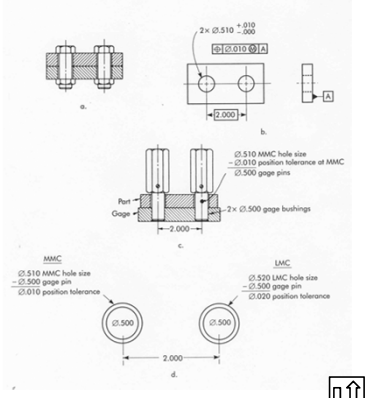

Table 9-2. Variable tolerances allowed by MMC

Feature Diameter (Ø)	Positional and Squareness Tolerances, Diameter (Ø)
Ø .510 (MMC or most critical size)	Ø .010 at MMC (tightest tolerance)
Ø .511	Ø .011
Ø .512	Ø .012
Ø .513	Ø .013
Ø .514	Ø .014
Ø .515	Ø .015
Ø .516	Ø .016
Ø .517	Ø .017
Ø .518	Ø .018
Ø .519	Ø .019
Ø .520 (LMC or least critical size)	Ø .020 at LMC (loosest tolerance)

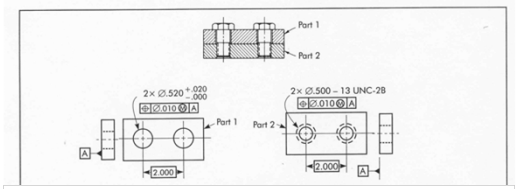

Figure 9-58. Tolerances and gages for the manufacture and assembly of two different parts.

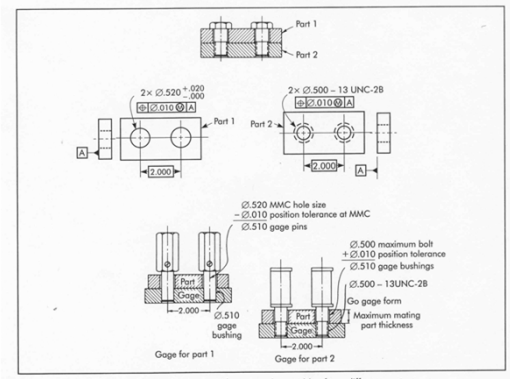

Figure 9-58. Tolerances and gages for the manufacture and assembly of two different parts.

Positional Tolerance Rules

- For parts with internal features, the nominal gage feature size is directly determined by subtracting the total positional tolerance specified at MMC from the specified MMC size of the feature to be gaged for location.
- For parts with external features, the nominal gage feature size is directly determined by adding the total positional tolerance specified at MMC size of the feature to be gaged for location.

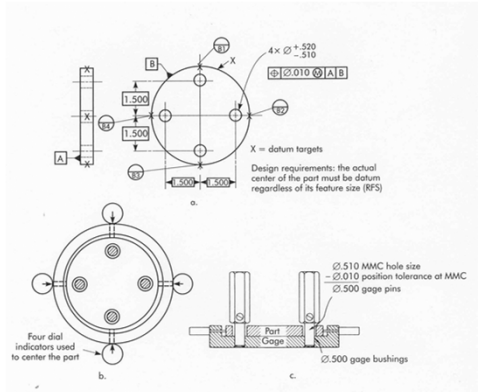

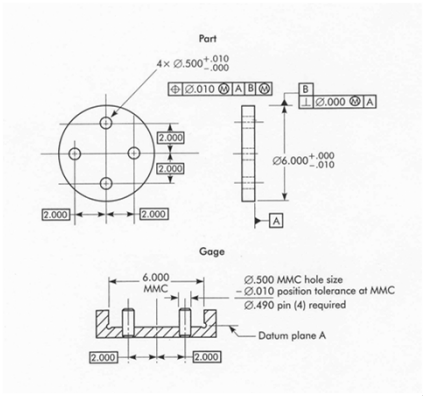

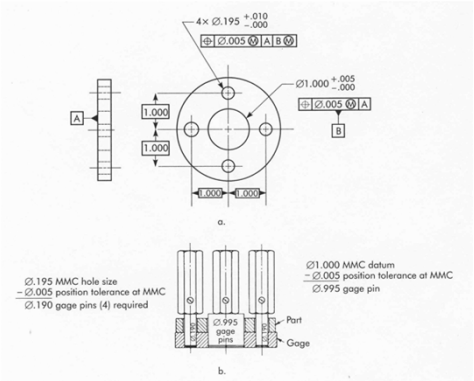

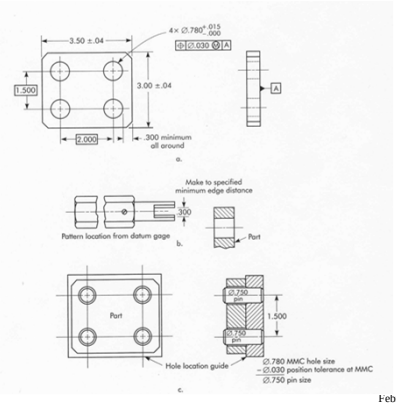

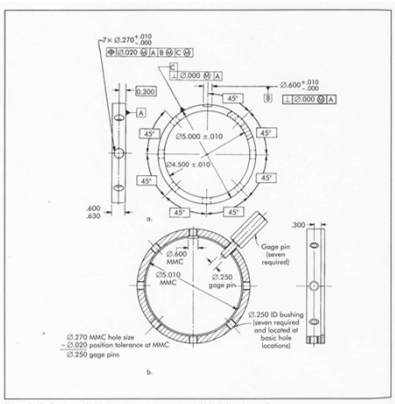

Figure 9-63. Gaging radial hole patterns: (a) workpiece; (b) hole location and squareness gage.

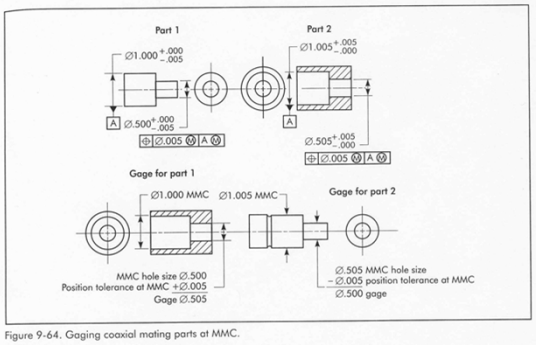

Figure 9-64. Gaging coaxial mating parts at MMC.

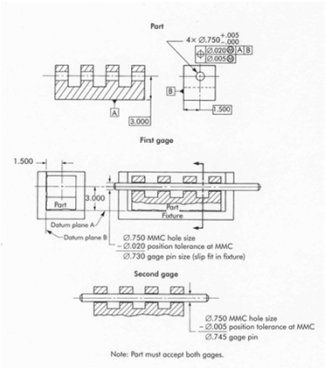

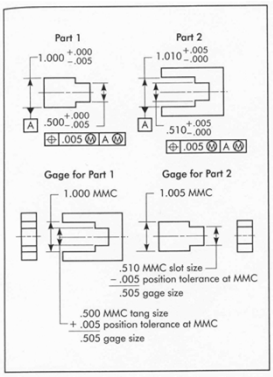

Figure 9-66. Checking noncylindrical mating parts at MMC.

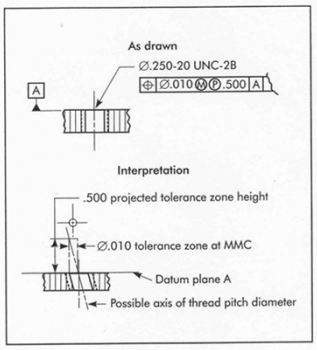

Figure 9-67. Projected tolerance zone.

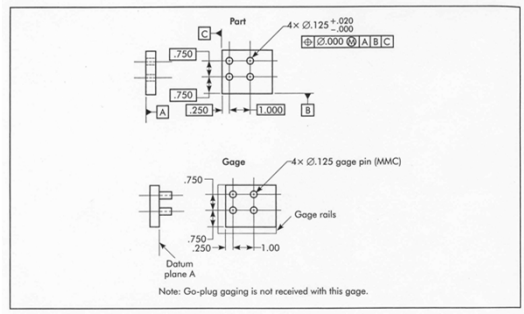

Figure 9-68. Positional tolerance of zero at MMC.

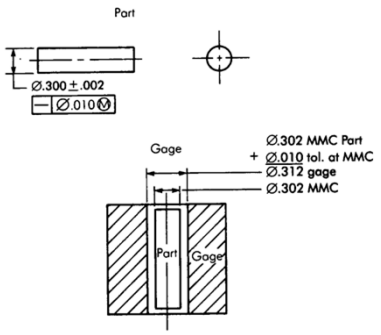

Figure 9-82. **Functional gage to check straightness of an axis MMC.**

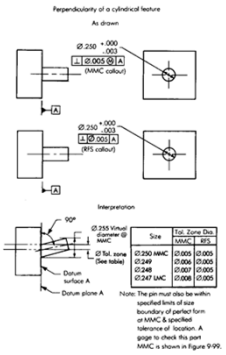

Size	Tol. Zone Dia.	
	MMC	RFS
Ø.250 MMC	Ø.005	Ø.005
Ø.249	Ø.006	Ø.005
Ø.248	Ø.007	Ø.005
Ø.247 LMC	Ø.008	Ø.005

Figure 9-92. (Continued)

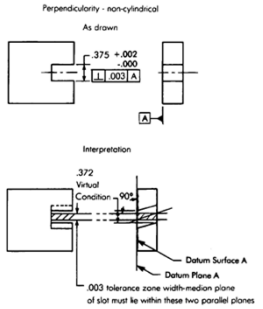

Note: Slot must also be within specified limits of size boundary of perfect form at MMC & specified tolerance of location.

Figure 9-92. (Continued)